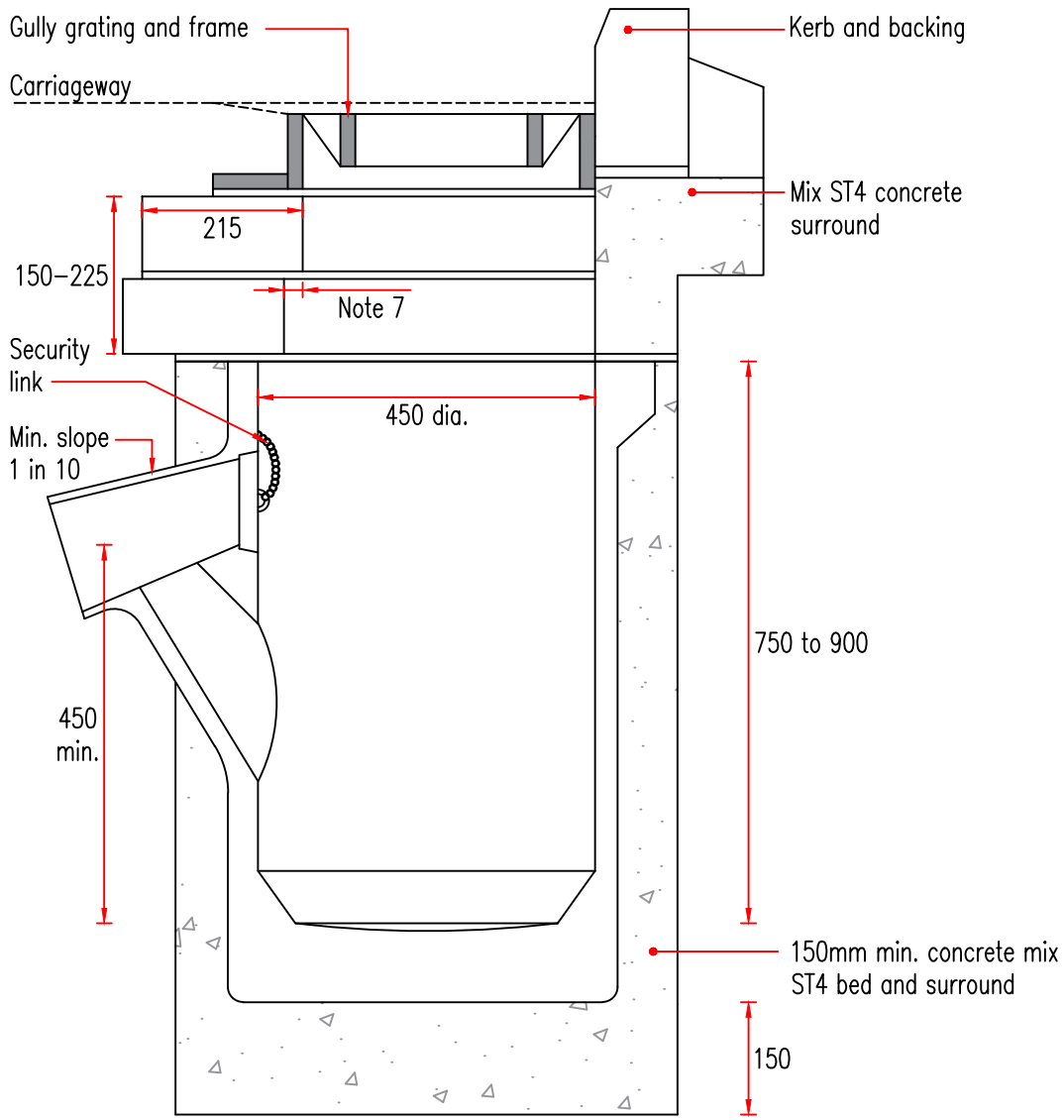

NOTES

Gully

1. The minimum depth from the top of the grating to the top of the gully outlet is to be 750 when the connecting pipe is under the carriageway.

2. Depth of gully pot to be 900mm in primary and secondary roads and, 750 mm in tertiary and shared surface roads.

Grating and Frame

3. To be D400 double triangular or hinged as required by the SCC.

4. Gully frame to be set 5–10mm below carriageway surface.

5. Precast concrete riser units are to be used. Reinstatement to be proprietary mastic asphalt or HRA as agreed with SCC.

6. Rodding eye to have bung and chain installed.

7. Corbelling not to exceed 25mm.

Suffolk County Council

Growth, Highways & Infrastruture
Suffolk County Council
Endeavour House
8 Russell Road
Ipswich
Suffolk IP1 2BX

DRAWING TITLE

DRAINAGE AND SERVICE DUCTS
PRECAST GULLY

REV.	DESCRIPTION	CHECKED	DATE
A	MINOR CHANGE IN NOTES	SH	07/2025

	INIT.	DATE	PROJECT TITLE STANDARD CONSTRUCTION DETAILS	
ORIGINATOR	RY	08/2024		
CHECKER	SH	08/2024	SCALE N.T.S.	DATE AUG. 2024
DESIGNER	RY	08/2024	DRAWING No. DM-500-03A	
REVIEWER	TK	08/2024		

File Path R:\Transport & Infrastructure\Highway Development Control\DM Drawings\DM ACAD 2023\DM-500-03 Precast gully.dwg

Plot date 03/07/2025

ORIGINAL SIZE: A4

BIL 21/09/09